WARRANTY 15 YEARS WARRANTY

INNOVATIVE uPVC PROFILE SOLUTIONS FOR A STRONGER TOMORROW.

HIGH QUALITY GERMAN TECHNOLOGY UPVC WINDOWS AND DOOR PROFILES

WALLNOX
PRIORITY TO QUALITY

MAKE IN INDIA · 15 YEARS WARRANTY · RoHS COMPLIANT · LEAD FREE · ISO 9001 : 2015

Call: 97774 93111 / 99373 60595 office@wallnox.com www.wallnox.com

Welcome to WALLNOX
PRIORITY TO QUALITY

Innovative uPVC Profile Solutions for a Stronger Tomorrow.

At WALLNOX, we are redefining quality and performance in the UPVC profile industry. As a leading manufacturer, we specialize in delivering high-strength, weather-resistant, and eco-friendly UPVC profiles designed for modern architecture and sustainable construction.

WHY CHOOSE WALLNOX?

Premium Quality Materials

Our UPVC profiles are engineered using advanced formulations to ensure maximum durability, UV resistance, and long-lasting color retention.

Cutting-Edge Manufacturing

Equipped with state-of-the-art German extrusion technology, our manufacturing units produce precision-crafted profiles that meet global standards.

Energy-Efficient & Eco-Friendly

WALLNOX profiles are 100% lead-free and recyclable, offering excellent thermal and acoustic insulation to help reduce energy consumption.

Promising Quality Check

Each profiles is rigorously tested to ensure quality, strength, aesthetics, colour and performance in even the most extreme Indian weather conditions.

SECTION DRAWING

WALLNOX
PRIORITY TO QUALITY

60 Casement System (Thickness 2.2mm)

Frame
WX-017
1.00 Kg/m
Length (m) 5.9
6 Pcs (Per Pack)

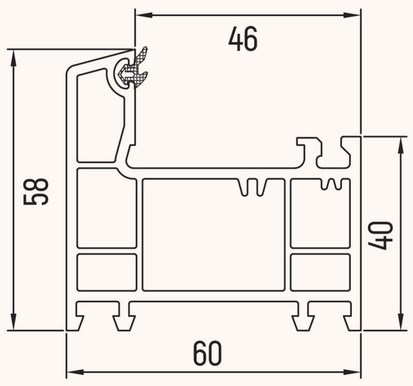

Door Frame
WX-017-1
1.13 Kg/m
Length (m) 5.9
6 Pcs (Per Pack)

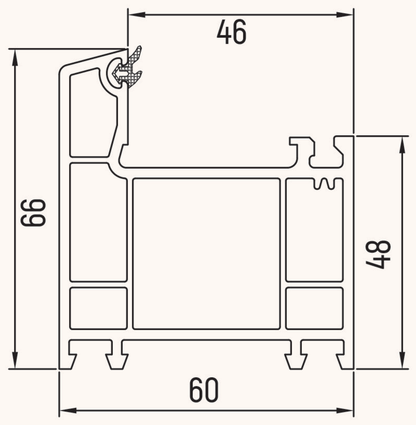

Mullion
WX-019
1.10 Kg/m
Length (m) 5.9
6 Pcs (Per Pack)

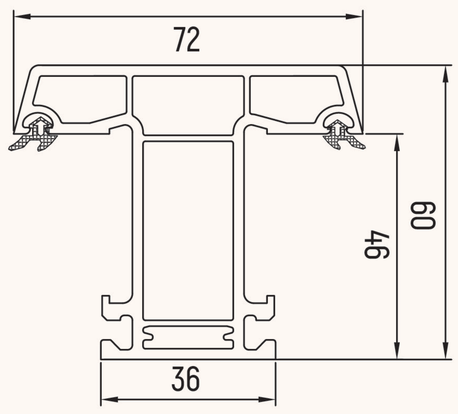

Z Mullion
WX-147
1.01 Kg/m
Length (m) 5.9
6 Pcs (Per Pack)

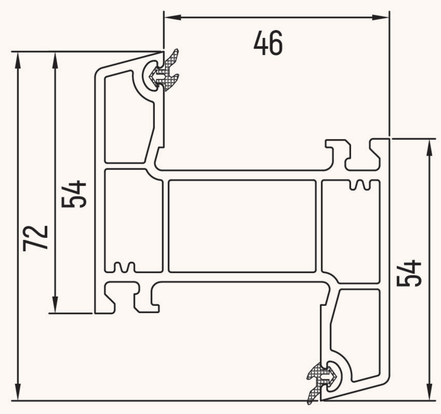

Outward Window Sash
WX-015
1.20 Kg/m
Length (m) 5.9
6 Pcs (Per Pack)

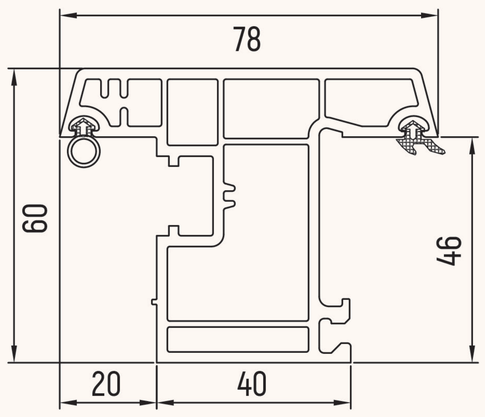

Outward Door Sash
WX-018
1.55 Kg/m
Length (m) 5.9
5 Pcs (Per Pack)

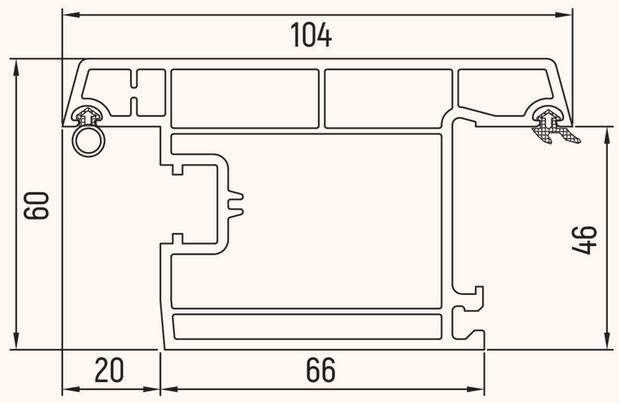

Inward Window Sash
WX-016
1.08 Kg/m
Length (m) 5.9
6 Pcs (Per Pack)

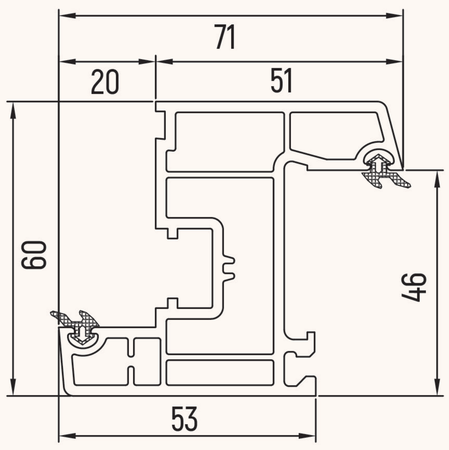

Inward Door Sash
WX-038
1.45 Kg/m
Length (m) 5.9
4 Pcs (Per Pack)

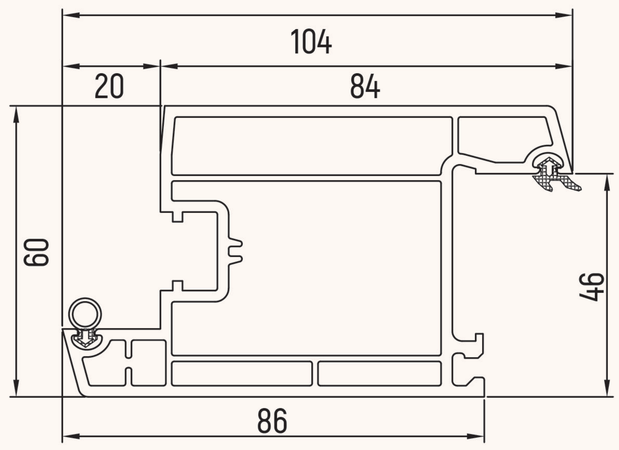

Frame
WX-011
0.850 Kg/m
Length (m) 5.9
6 Pcs (Per Pack)

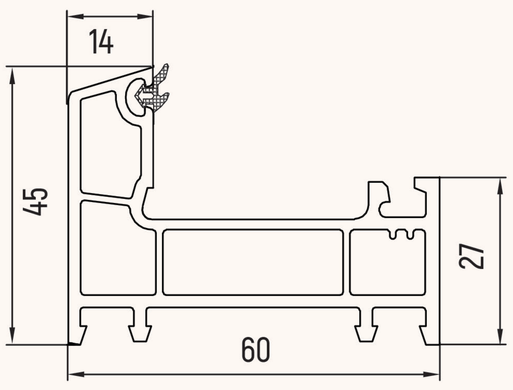

Float Mullion
WX-220
0.94Kg/m
Length (m) 5.9
8 Pcs (Per Pack)

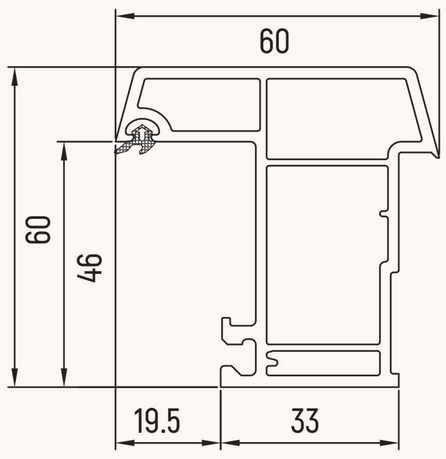

60/60H Casement System GB

5mm Glass Bead
WX-022-1
0.32 Kg/m
Length (m) 5.9
30 Pcs (Per Pack)

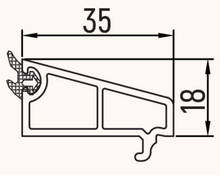

10mm Glass Bead
WX-021-1
0.265 Kg/m
Length (m) 5.9
30 Pcs (Per Pack)

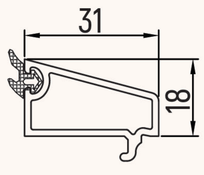

17mm Glass Bead
WX-106
0.225 Kg/m
Length (m) 5.9
30 Pcs (Per Pack)

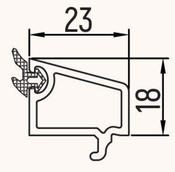

SECTION DRAWING

80 Series Sliding Systems (Thickness 2.0mm)

Frame
WX-102
0.84Kg/m
Length (m) 5.9
8 Pcs (Per Pack)

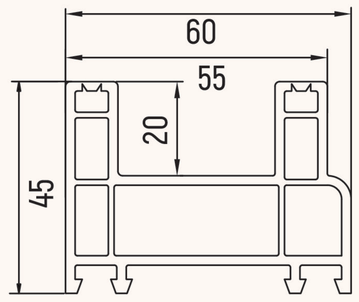

Frame
WX-055
0.84Kg/m
Length (m) 5.9
8 Pcs (Per Pack)

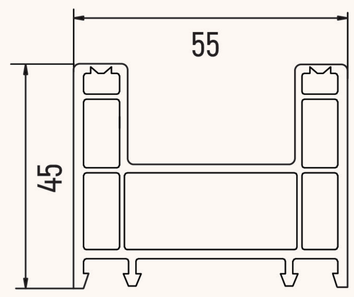

Frame
WX-111
1.19Kg/m
Length (m) 5.9
6 Pcs (Per Pack)

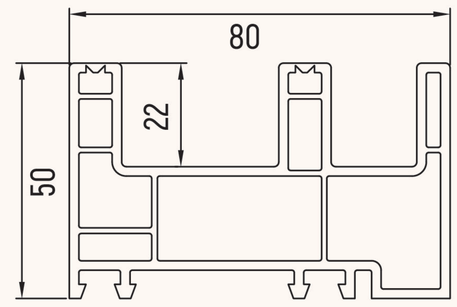

Frame
WX-082
1.20Kg/m
Length (m) 5.9
6 Pcs (Per Pack)

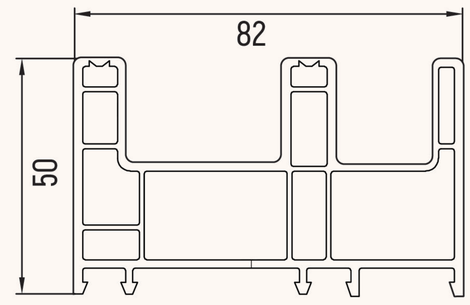

Frame
WX-333
1.45Kg/m
Length (m) 5.9
4 Pcs (Per Pack)

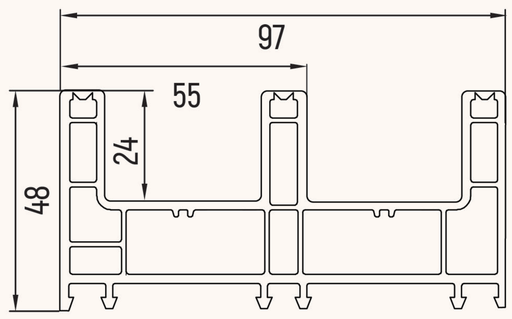

Sash
WX-050-1
0.740Kg/m
Length (m) 5.9
10 Pcs (Per Pack)

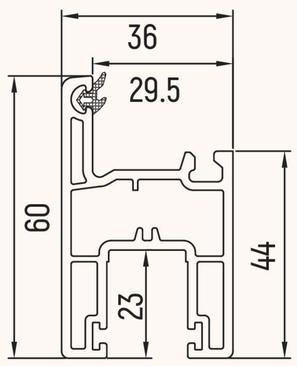

Sash Joint
WX-052
0.225 Kg/m
Length (m) 5.9
20 Pcs (Per Pack)

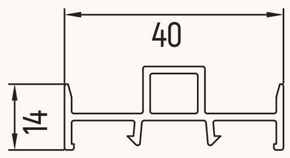

Inter lock
WX-061
0.20Kg/m
Length (m) 5.9
30 Pcs (Per Pack)

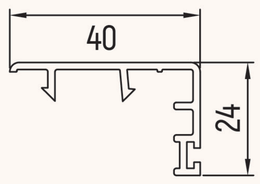

5mm Glass Bead
WX-006
0.22Kg/m
Length (m) 5.9
30 Pcs (Per Pack)

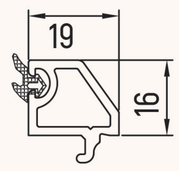

88 Series Sliding Systems (Thickness 2.0mm)

Frame
WX-202-1
1.350Kg/m
Length (m) 5.9
6 Pcs (Per Pack)

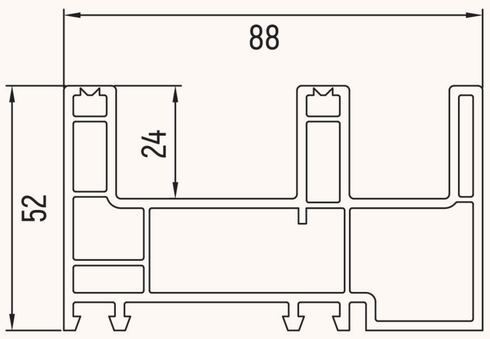

Window Sash
WX-056
0.87Kg/m
Length (m) 5.9
10 Pcs (Per Pack)

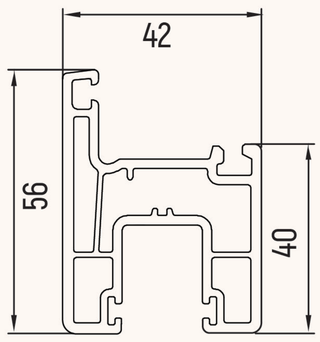

Frame
WX-201
1.35Kg/m
Length (m) 5.9
6 Pcs (Per Pack)

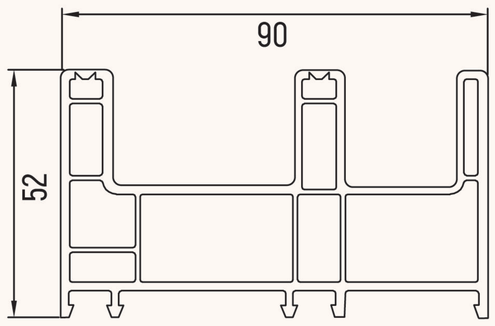

Frame
WX-032-1
1.05Kg/m
Length (m) 5.9
8 Pcs (Per Pack)

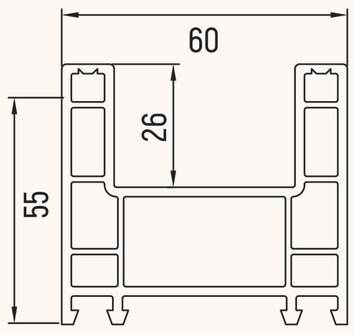

Window Sash
WX-033
0.950Kg/m
Length (m) 5.9
10 Pcs (Per Pack)

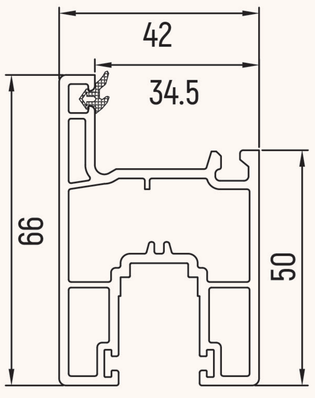

Door Sash
WX-034
1.01Kg/m
Length (m) 5.9
8 Pcs (Per Pack)

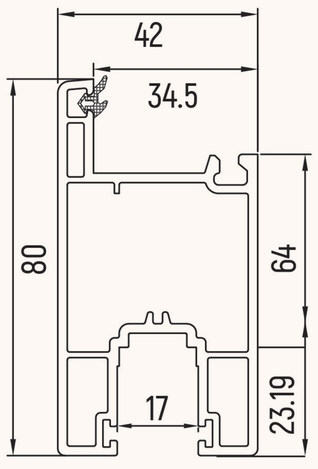

Frame
WX-246H Length (m) 5.9
1.72Kg/m 4 Pcs (Per Pack)

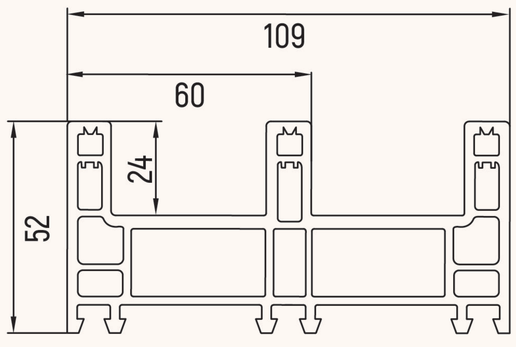

SECTION DRAWING

WALLNOX
PRIORITY TO QUALITY

88 Sliding System Auxillary Profiles

Inter lock
WX-036
0.22Kg/m
Length (m) 5.9
30 Pcs (Per Pack)

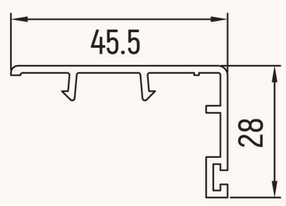

Inter lock
WX-312
0.28Kg/m
Length (m) 5.9
30 Pcs (Per Pack)

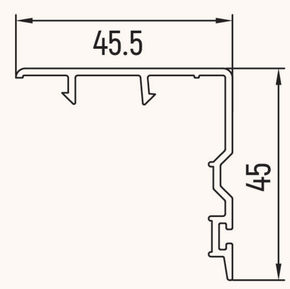

Sash Joint
WX-048
0.25Kg/m
Length (m) 5.9
20 Pcs (Per Pack)

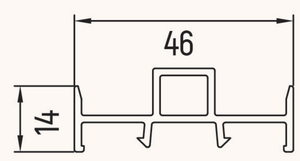

88 Sliding System Glazing Bead

5mm Glass Bead
WX-037
0.280Kg/m
Length (m) 5.9
30 Pcs
(Per Pack)

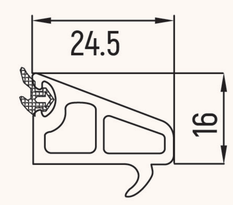

19mm Glass Bead
WX-223
0.170Kg/m
Length (m) 5.9
30 Pcs
Per Pack)

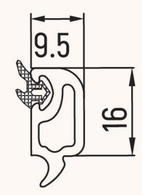

22mm Glass Bead
WX-007
0.155Kg/m
Length (m) 5.9
30 Pcs
(Per Pack)

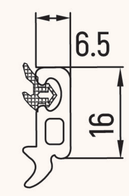

Screen Sash
WX-074
0.640Kg/m
Length (m) 5.9
9 Pcs (Per Pack)

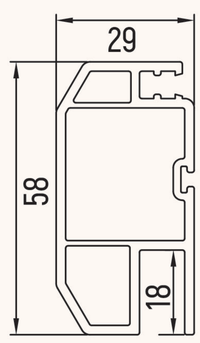

Screen Sash
WX-089
0.55Kg/m
Length (m) 5.9
12 Pcs (Per Pack)

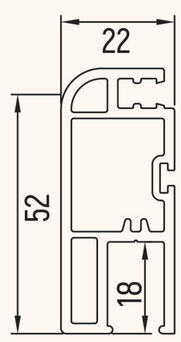

Screen Sash Mullion
WX-030
0.43 Kg/m
Length (m) 5.9
6 Pcs (Per Pack)

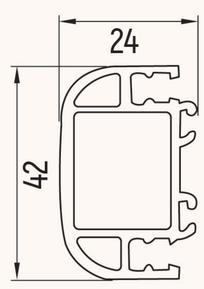

Sash Mullion
WX-035
0.72 Kg/m
Length (m) 5.9
6 Pcs (Per Pack)

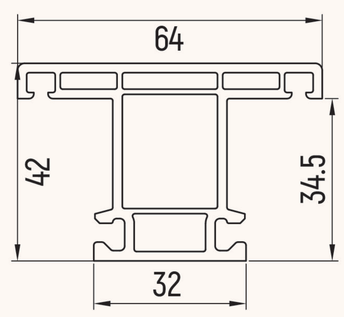

Door Panel Profile

15mm Door Panel
WX-020-1
0.800 Kg/m
Length (m) 5.9
6 Pcs (Per Pack)

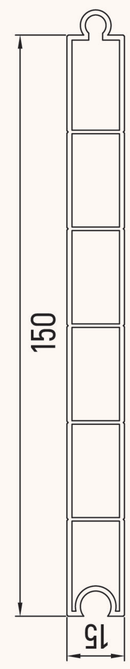

Villa Series (Casement Big Series)

Frame
WX-001
1.280 Kg/m
Length (m) 5.9
4 Pcs
(Per Pack)

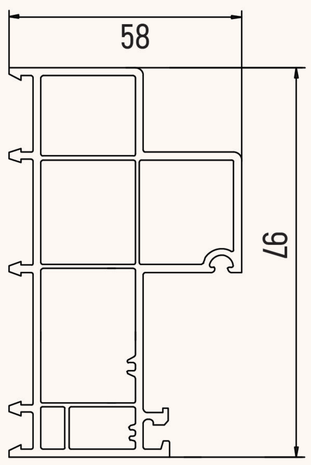

Mullion
WX-002
1.440 Kg/m
Length (m) 5.9
4 Pcs
(Per Pack)

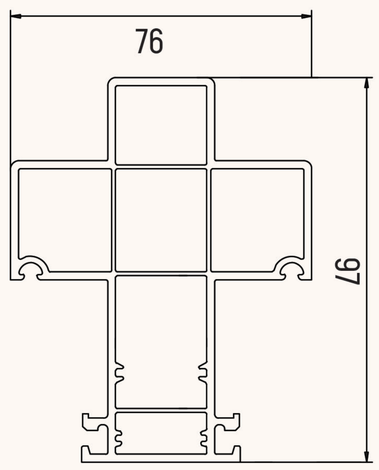

Bug Sash
WX-003
0.540 Kg/m
Length (m) 5.9
6 Pcs
(Per Pack)

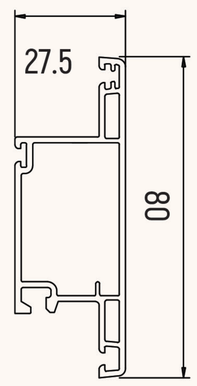

60 Casement & Sliding Auxillary Profiles

Coupling
WX-031-1
0.15Kg/m
Length (m) 5.9
40 Pcs (Per Pack)

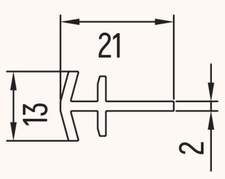

Coupling
WX-090
0.53Kg/m
Length (m) 5.9
6 Pcs (Per Pack)

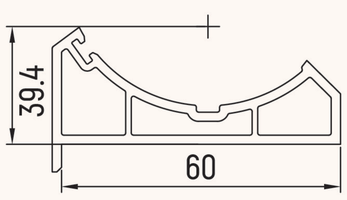

Coupling
WX-051
0.68Kg/m
Length (m) 5.9
4 Pcs (Per Pack)

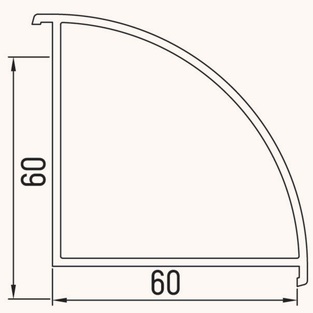

Coupling
WX-080
1.19Kg/m
Length (m) 5.9
4 Pcs (Per Pack)

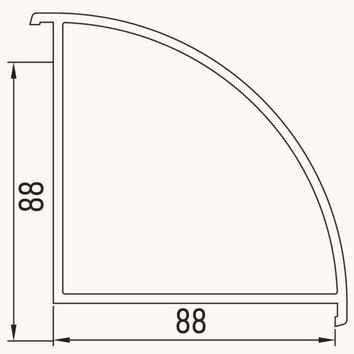

Coupling
WX-013
0.62Kg/m
Length (m) 5.9
8 Pcs (Per Pack)

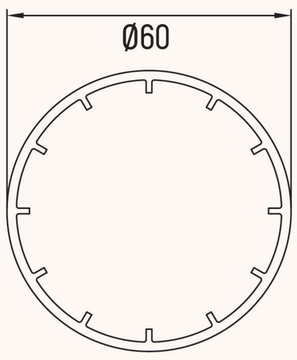

SECTION DRAWING

WALLNOX
PRIORITY TO QUALITY

60 Casement & Sliding Auxillary Profiles

Fixed Frame
WX-203-1
1.09Kg/m
Length (m) 5.9
8 Pcs (Per Pack)

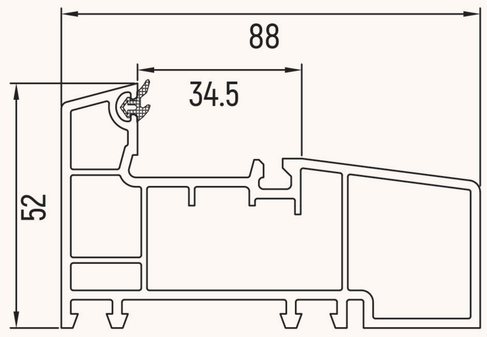

Fixed Mullion
WX-204-1
1.17 Kg/m
Length (m) 5.9
6 Pcs (Per Pack)

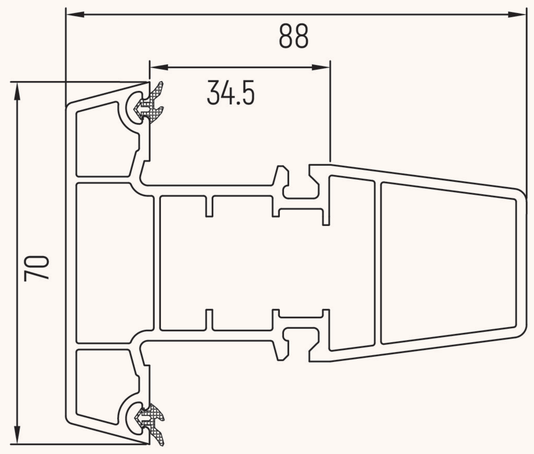

Coupling
WX-049
0.68Kg/m
Length (m) 5.9
6 Pcs (Per Pack)

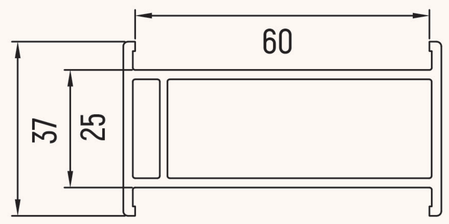

Louver Bead
WX-117
0.30Kg/m
Length (m) 5.9
20 Pcs (Per Pack)

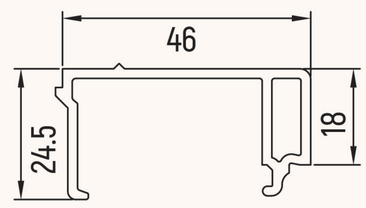

Louver Sash
WX-118
0.22Kg/m
Length (m) 5.9
10 Pcs (Per Pack)

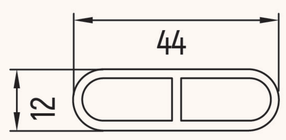

Left Punching

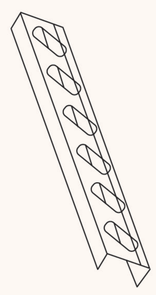

Right Punching

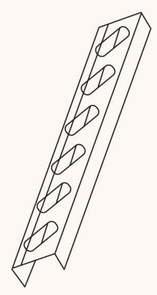

Steel Reinforcement Drawing

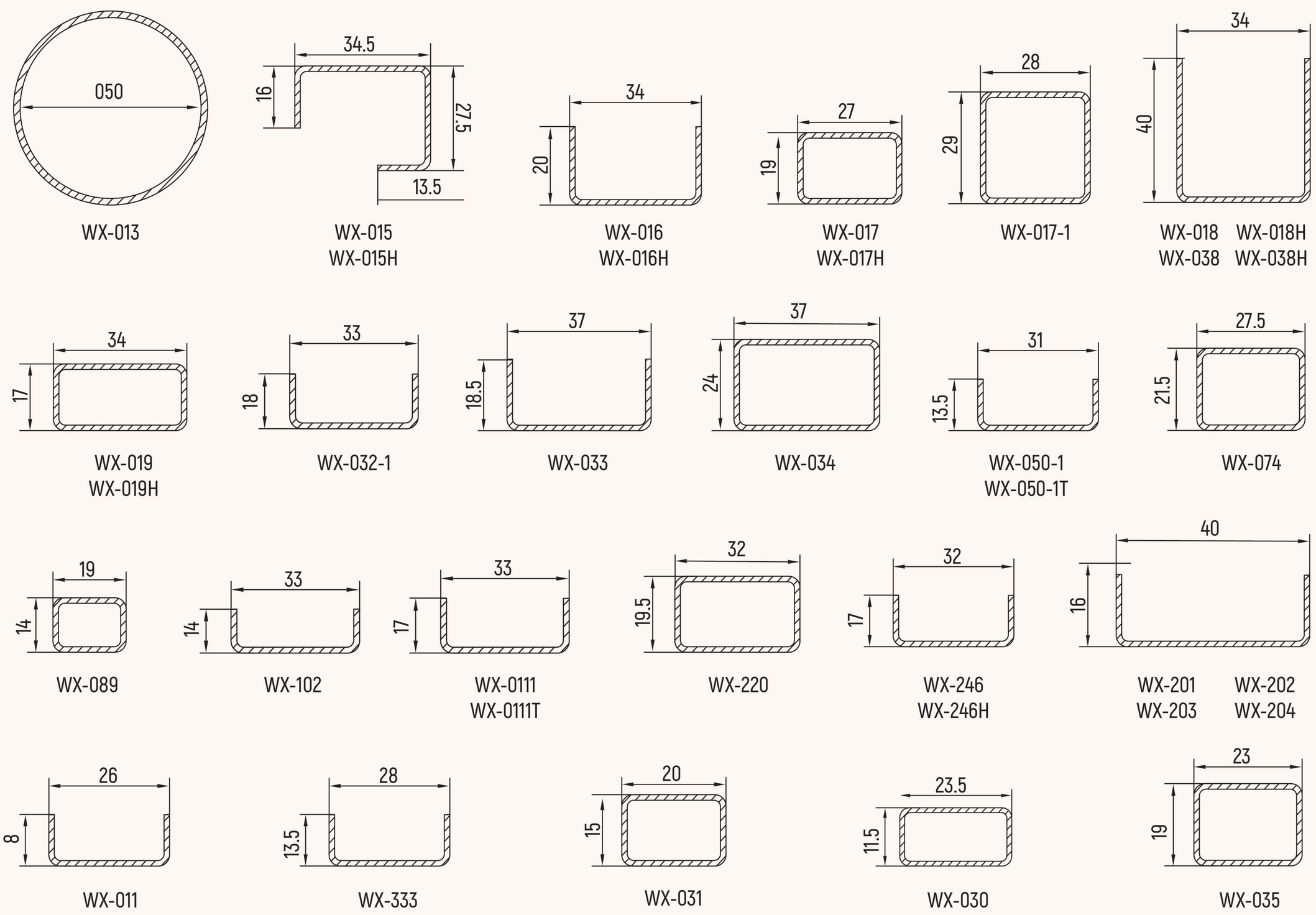

SECTION DRAWING

Golden Oak

Oak Rustica

60 Casement System (Thickness 2.5mm)

Frame
WXC-60F
1.042Kg/m
Length (m) 5.9
6 Pcs (Per Pack)

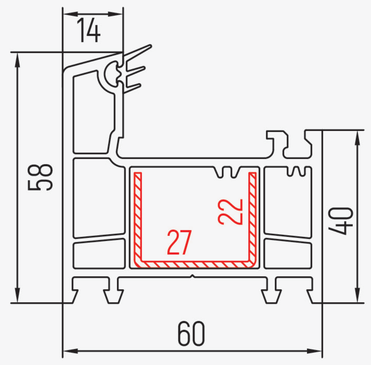

Z Mullion
WXC-60ZM
0.983Kg/m
Length (m) 5.9
6 Pcs (Per Pack)

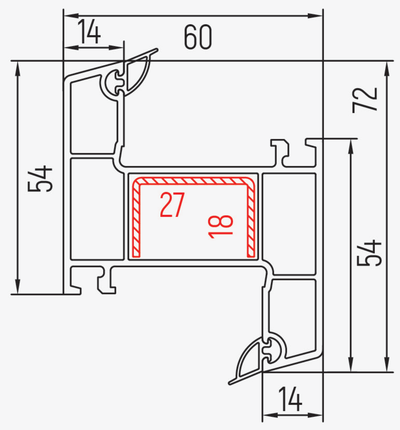

Mullion
WXC-60MO
1.149Kg/m
Length (m) 5.9
6 Pcs (Per Pack)

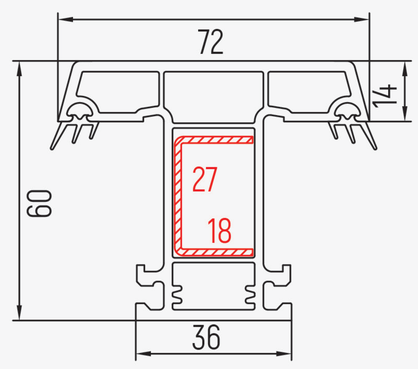

Outward Window Sash
WXC-60SO
1.21Kg/m
Length (m) 5.9
6 Pcs (Per Pack)

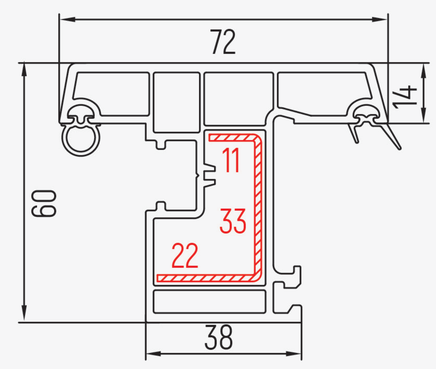

Outward Door Sash
WXC-60DO
0.72 Kg/m
Length (m) 5.9
6 Pcs (Per Pack)

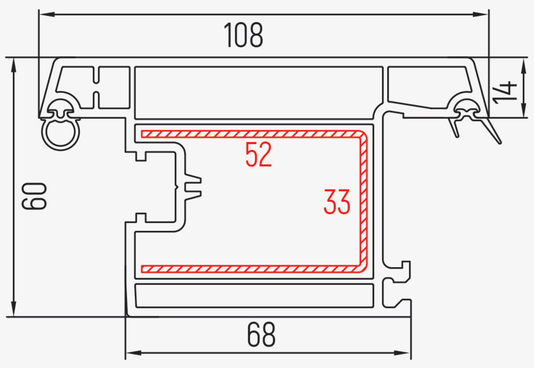

Door Panel Profile

20mm Door Panel
RXC-20DP
0.9Kg/m
Length (m) 5.9
6 Pcs (Per Pack)

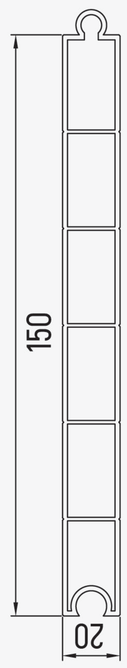

60/60H Casement System GB

5mm Glass
WXC-5GB
0.249 Kg/m
Length (m) 5.9
12 Pcs (Per Pack)

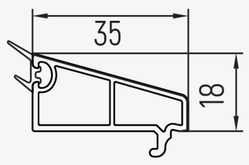

20mm Glass
WXC-20GB
0.22 Kg/m
Length (m) 5.9
6 Pcs (Per Pack)

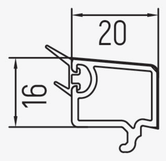

Casement & Sliding Auxillary Profiles

Coupling
WXC-88HP
0.092 Kg/m
Length (m) 5.9
40 Pcs (Per Pack)

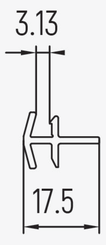

Coupling
WXC-60RPJ
0.5 Kg/m
Length (m) 5.9
6 Pcs (Per Pack)

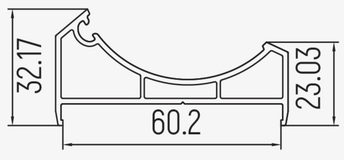

Coupling
WXC-60L
0.68 Kg/m
Length (m) 5.9
4 Pcs (Per Pack)

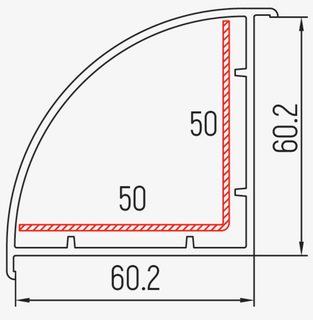

Coupling
WXC-88L
1.19 Kg/m
Length (m) 5.9
4 Pcs (Per Pack)

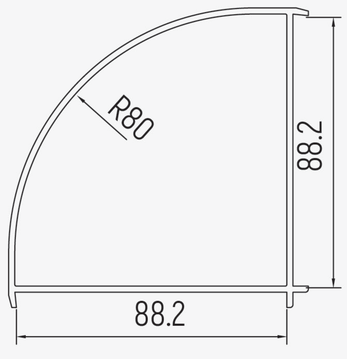

Coupling
WXC-60RP
0.683 Kg/m
Length (m) 5.9
8 Pcs (Per Pack)

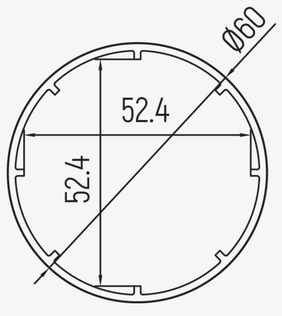

Coupling
WXC-60HP
0.634 Kg/m
Length (m) 5.9
10 Pcs (Per Pack)

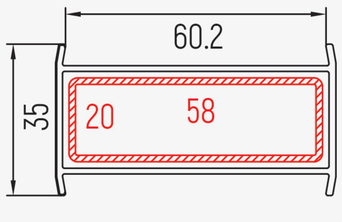

Float Mullion
WXC-60FM
0.634 Kg/m
Length (m) 5.9
10 Pcs (Per Pack)

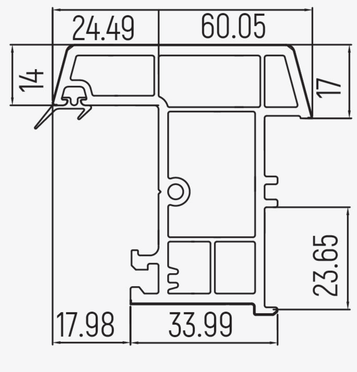

*Drawings Highlighted in Red - Steel Reinforcement Drawing

SECTION DRAWING

Golden Oak

Oak Rustica

60/88/112 Sliding System (Thickness 2.5mm)

Frame
WXC-60F
1.133 Kg/m
Length (m) 5.9
10 Pcs (Per Pack)

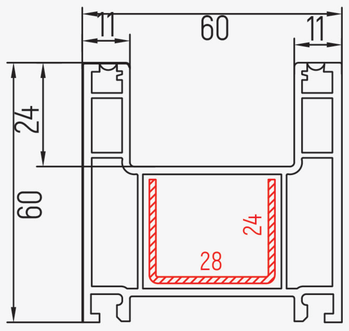

Frame
WXC-88F
1.35 Kg/m
Length (m) 5.9
8 Pcs (Per Pack)

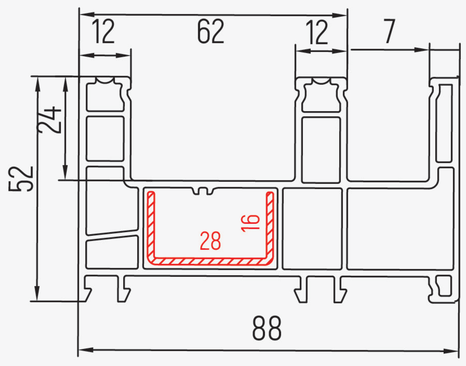

Frame
WXC-112F
1.92 Kg/m
Length (m) 5.9
8 Pcs (Per Pack)

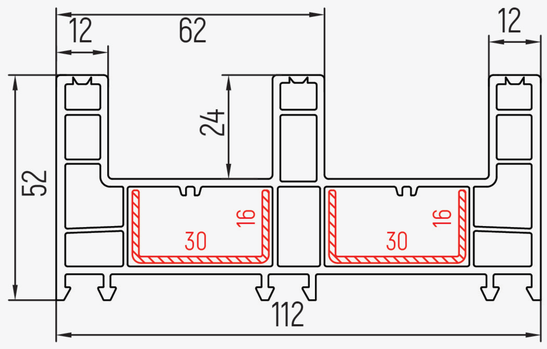

Fixed Frame
WXC-88FF
1.046 Kg/m
Length (m) 5.9
8 Pcs (Per Pack)

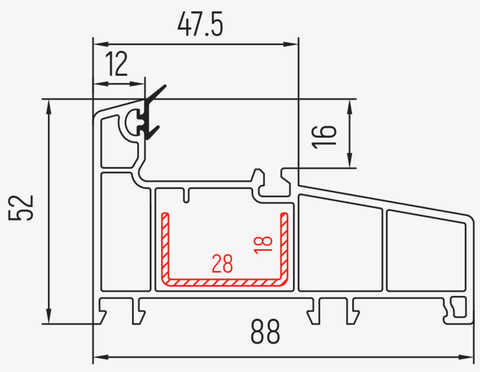

Window Sash
WXC-66S
1.042 Kg/m
Length (m) 5.9
8 Pcs (Per Pack)

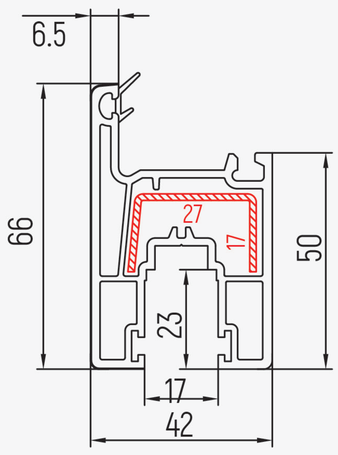

Door Sash
WXC-92D
1.40 Kg/m
Length (m) 5.9
8 Pcs (Per Pack)

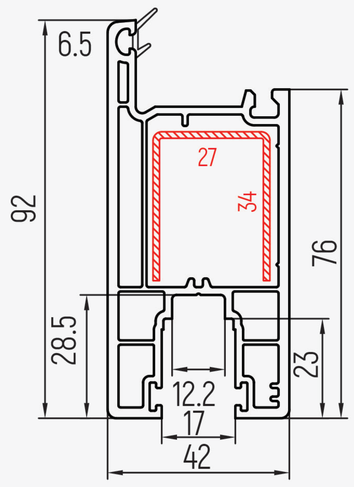

Inter lock
WXC-66IL
0.227 Kg/m
Length (m) 5.9
6 Pcs (Per Pack)

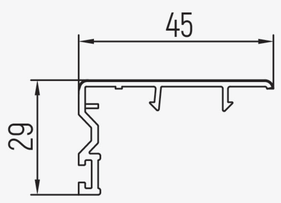

Inter lock
WXC-92IL
0.217 Kg/m
Length (m) 5.9
6 Pcs (Per Pack)

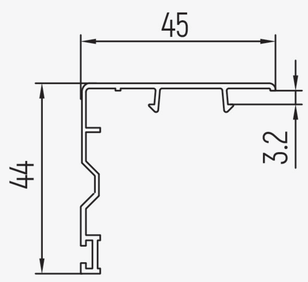

Coupling
WXC-42CI
0.31 Kg/m
Length (m) 5.9
6 Pcs (Per Pack)

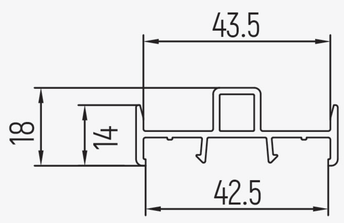

Screen Sash
WXC-52MS
0.492 Kg/m
Length (m) 5.9
6 Pcs (Per Pack)

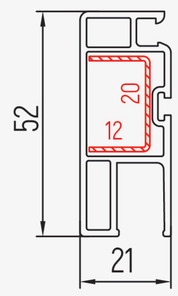

5mm Glass Bead
WXC-5GB
0.22 Kg/m
Length (m) 5.9
30 Pcs (Per Pack)

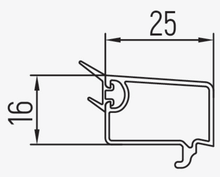

8mm Glass Bead
WXC-20GB
0.22 Kg/m
Length (m) 5.9
30 Pcs (Per Pack)

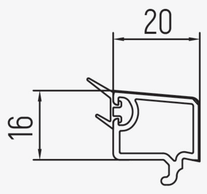

20mm Glass Bead
WXC-20GB
0.15 Kg/m
Length (m) 5.9
30 Pcs (Per Pack)

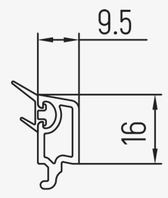

WALLNOX
PRIORITY TO QUALITY

Plot No.548/884/3317, Banukuala, Badagada Road,
Bhubaneshwar, Khordha, Odisha 751018 Phone: 97774 93111 / 99373 60595
Email: office@wallnox.com | www.wallnox.com